PROJECT REFERENCE NO.	SHEET NO.
SS-4905BP	SIG.12

FIBER OPTIC CABLE

INTERSECTION LOCATION
S. GREGSON ST. AT W. PEABODY ST.
SIG. INV. # 05–1236

LEGEND
X = FUSION SPLICE

COLOR CODE
TIA/EIA 598–A
(1) BLUE
(2) ORANGE
(3) GREEN
(4) BROWN
(5) SLATE
(6) WHITE

Notes:
Unused fibers left coiled and stored in splice tray.
Unused Buffer Tubes left coiled and stored in splice tray.

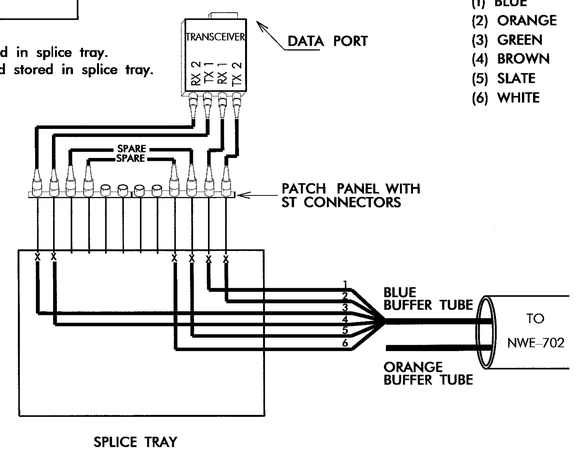

INTERSECTION LOCATION
W. MAIN STREET AT GREGSON STREET
SPLICE ENCLOSURE #NWE–702

LEGEND
X = FUSION SPLICE
C = CAP IN TRAY

COLOR CODE
TIA/EIA 598–A
(1) BLUE
(2) ORANGE
(3) GREEN
(4) BROWN
(5) SLATE
(6) WHITE

Notes:
Unused fibers left coiled and stored in splice tray.
Unused Buffer Tubes left coiled and stored in splice tray.

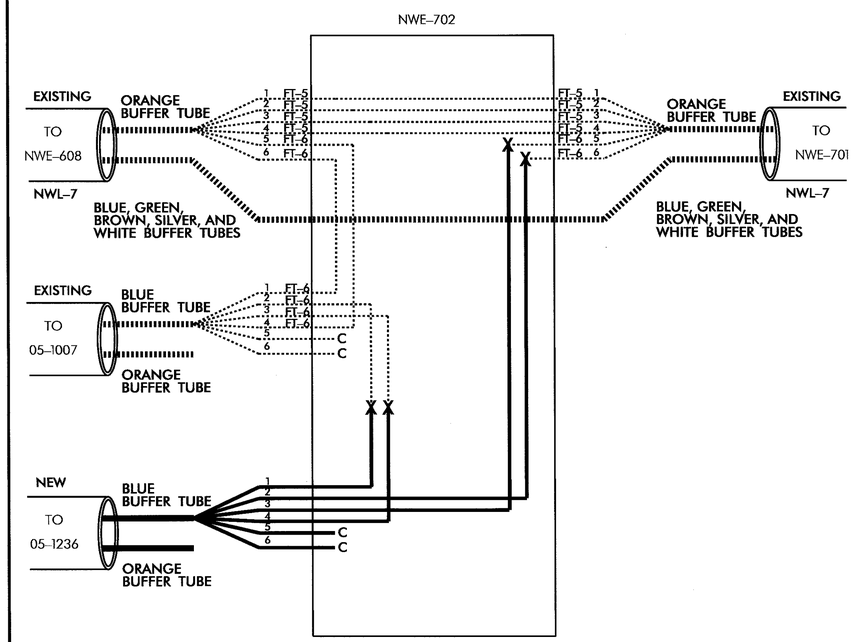

INCLUDE ON THE COVER OF EACH SPLICE TRAY THE FOLLOWING: REFERENCE SECTION 1731 "FIBER OPTIC SPLICE ENCLOSURE"

1) SPLICE LOCATION
2) DATE
3) COMPANY NAME
4) NAME OF INDIVIDUAL PERFORMING THE SPLICING

PRIOR TO INSTALLING THE COVER ON THE SPLICE TRAY TAKE A DIGITAL PHOTOGRAPH SHOWING THE SPLICE TRAY AND INFORMATION SHOWN ABOVE (1–4) AND SUBMIT PHOTOGRAPH ALONG WITH OTDR TEST RESULTS.

NOTES:

TRANSCEIVER TERMINATION CONFIGURATIONS ARE GENERIC. CONTRACTOR IS RESPONSIBLE FOR DETERMINING \ ENSURING PROPER TERMINATIONS.

NOTIFY THE CITY OF DURHAM'S TRANSPORTATION ENGINEER (PETE NICHOLAS @ 919 560–4366 EXT 36436) 24 HOURS PRIOR TO BEGINNING WORK ON SIGNAL SYSTEMS COMMUNICATION CABLE. NOTIFY THE CITY TRANSPORTATION ENGINEER AFTER ALL WORK IS PERFORMED TO ENSURE THAT ALL FIBER CIRCUITS ARE FUNCTIONING PROPERLY.

Prepared in the Offices of:
Transportation Mobility and Safety Division
STATE OF NORTH CAROLINA DEPARTMENT OF TRANSPORTATION
Intelligent Transportation Systems Section
750 N. Greenfield Pkwy., Garner, NC 27529

SPLICE PLANS

DIVISION: 05 DURHAM CO. DURHAM

PLAN DATE: MARCH 2014	REVIEWED BY: I.N. AVERY
PREPARED BY: B.A. STOUCHKO	REVIEWED BY: G.A. FULLER

REVISIONS	INIT.	DATE

SEAL
NORTH CAROLINA PROFESSIONAL SEAL 023919 ENGINEER GREGORY A. FULLER

Gregory A. Fuller 3/20/14
SIGNATURE DATE

CADD Filename: